Trio GENERATOR

MOTEURS Baudouin

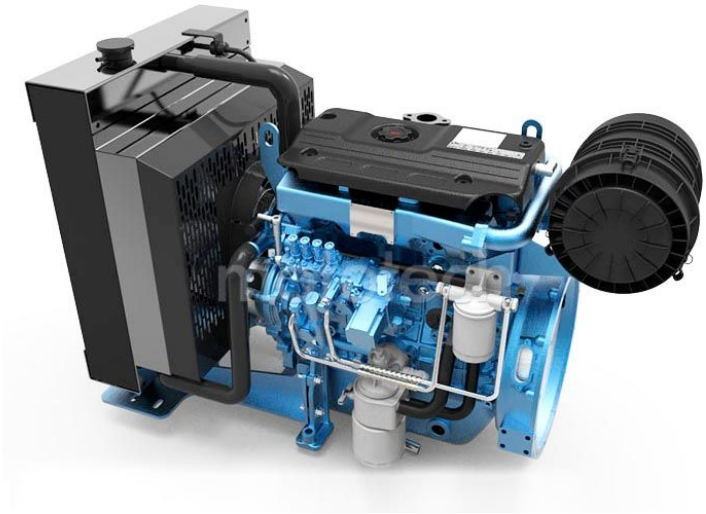

MADE IN TURKEY

International Organization for Standardization ISO 14001:2015

INTERNATIONAL CERTIFICATIONS ISO 9001

OUTPUT VALUES

Standby Power	Voltage	230/400
Standby Power	kVA	440
Standby Power	kW	352
Standby Power	Amper	633
Prime Power	Voltage	230/400
Prime Power	kVA	400
Prime Power	kW	320
Prime Power	Amper	576

DIESEL ENGINE

Brand	BAUDOUIN
Model	6M21G440/5
Max. Total Output Pow. (kWm/hp)	400/360
Cylinder Displacement (lt)	12,54
Cylinder Orientation	6 Single Line
Bore x Stroke(mm*mm)	127 x 165
Compression Ratio	16:1
Governor Type	Electronic
Rotation	1500 RPM
Aspiration System	Turbo AAC
Injection	Direct
Cooling System	Water Cooled
Electrcal System(VDC)	12/24
Oil Capacity (lt)	24
Engine Coolant Capacity (lt)	90
Fuel Cons. %50 (lt/h)	41
Fuel Cons. %75 (lt/h)	60
Fuel Cons. %100 (lt/h)	82

ALTERNATOR

Standby Power (kVa/kw)	440/352
Prime Power (kVa/kw)	400/320

Brand	TRIO
Output Voltage (V)	230/400
Frequency (Hz)	50
Stationary Vol. Regulation(±)	0,01
Short Circuit Current	%300 (10 sec)
Insulation	H
Protection	IP23
E ciency (%)	92,7
Overloading	110% for 1 hour
Power Factor (cos Q=0.8)	0,8
Tot. Harmonic Dist. Rate	<2 %
Connection Type	Star
Number of Pole	4
Number of Bearing	Single

DIMENSIONS & WEIGHT

Without Canopy	Width	1500 mm
Without Canopy	Length	3500 mm
Without Canopy	High	2200 mm
Without Canopy	Weight	3150 kg
Without Canopy	Fuel Tank Capacity	660 lt
With Canopy	Width	1500 mm
With Canopy	Length	3500 mm
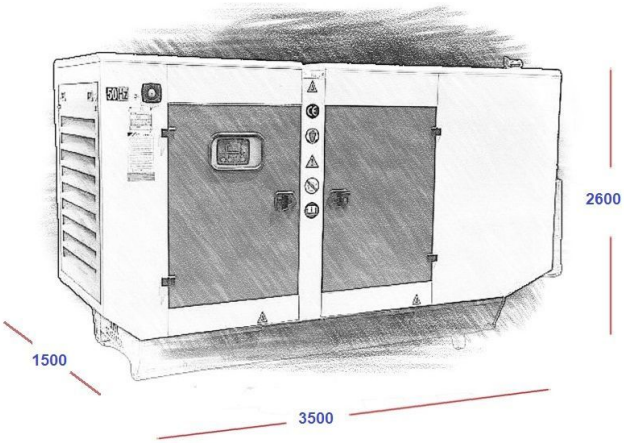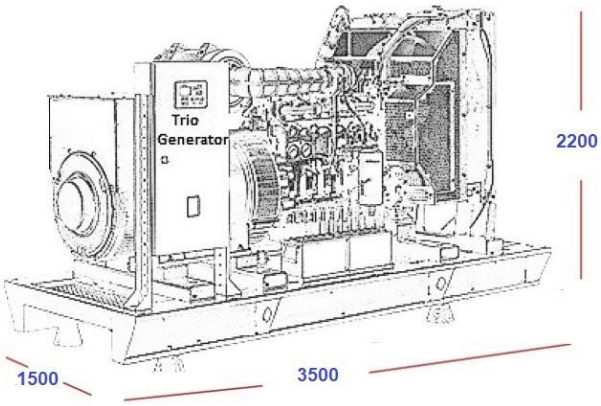
With Canopy	High	2600 mm
With Canopy	Weight	3650 kg
With Canopy	Fuel Tank Capacity	660 lt